Exam information

ℹ

Course	Computer systems with project (1DT003)
Examination date	Thursday 2024-03-14.
Time	08:00 - 13:00.
Type	Digital exam.
Closed book	This is a closed book exam. This means that no aides such as notes, slides, books, internet searches and collaboration with others are allowed.

Instructions

Part A

Part A consists of 6 sections, corresponding to module 0-5 in the course, with 10 points each.

To pass the exam, you must:

1. Get at least 3 points in each of the sections in part A
2. Get at least 36 points (60% of max) on part A

Most of the questions are multiple choice-questions where there is only one correct answer.

If you believe there is more than one correct answer, choose the best one based on context and what has been covered in the course.

Part B

The problems in part B only needs to be answered if you aim at getting grade 4 or 5 on the exam.

To get grade 4 or 5 on the exam, you have to:

1. First pass part A as described above
2. Out of 20 possible points in part B get...
   ...at least 10 points in part B for an exam grade of 4
   ...at least 15 points in part B for an exam grade of 5

Questions during exam

Lars-Åke will visit the exam hall twice during the exam - approximately at 09:30 and 11:30.

Anonymous exam

This is an anonymous exam. You will be identified by an anonymous exam code. When the teaching staff marks the exam they will only be able to see the anonymous exam code and not your true identity. Only after the grades have been submitted will your true identity be known.

1 I confirm that I will not seek assistance from anyone else to answer the exam questions.

- True ✔
- False

I confirm that I will not use unauthorized resources such as notes, course slides, text books, internet searches etc to answer the exam questions.

- True ✔
- False

Totalpoäng: 0

Comments and assumptions

2 If you think that something is wrong with a question or that some information is missing in a question, take a note here.

The questions are numbered. Use the **question number** when you make an assumption or a comment. For example, if you wish to comment on question 7, write **Question 7** on a single line followed by your assumption or comment regarding question 7.

Write your assumptions and comments here

Teckenf...

Ord: 0

Totalpoäng: 0

i

Part A

...in which you show that you shall pass by:

- **Getting at least 3 points in each section of part A**
- **Getting at least 36 points in total on part A**

Mixed concepts

In the below table you find 20 statements. Each statement is identified by a label (A-T).

A	A family of standards specified by the IEEE Computer Society for maintaining compatibility between operating systems	**K**	Abstraction used to represent the endpoint of network communication
B	Used to define the network identifier part of an IP address	**L**	Dynamically considers every request and decides whether it is safe to grant it at this point.
C	Not permitted to be swapped out	**M**	The requirement of ensuring that no two concurrent processes or threads are in the same critical section at the same time.
D	Communication infrastructure based on statistical multiplexing	**N**	Stores all local variables.
E	Behaves like a pair of simplex FIFO channels	**O**	Error-control mechanisum in communication that uses acknowledgments.
F	Much more difficult for multithreaded applications compared to single-threaded applications	**P**	Does not use preemption
G	Confirms reception of data	**Q**	Are caused by internal events.
H	Restricts the set of instructions that are allowed to be executed by the CPU.	**R**	Characterized by few very long CPU bursts
I	Specifies what happens when a specific message is being received	**S**	Ensures that at least one of the four necessary conditions for deadlock can never hold.
J	Smallest sequence of instructions that can be managed independently by a scheduler.	**T**	Used to examine the status of file descriptors of open I/O channels

3 In the table to the left you find 20 statements. Each statement is identified by a label (A-T).

Pair each of the 10 concepts below with the statement (A -T) that best describes the concept or best relates to the concept. For each concept, answer by entering the chosen statement label (A - T). There are 10 concepts and 20 statements, hence only 10 of the 20 statements will be among the valid pairings.

Concept	Statement
A CPU-bound process	(R)
Protocol	(I)
The Internet	(D)
Testing and debugging	(F)
POSIX	(A)
SJF	(P)
TCP connection	(E)
Network mask	(B)
Acknowledgment	(G)
Memory resident	(C)

Marking: Each correct pairing will result in **1 point**.

Totalpoäng: 10

Module 1

4 Each process gets a process memory image allocated with the following segments: stack, heap, data and text.

Select the the correct usage for the stack, heap, data and text segments of the process memory image.

	Data whose size is know at compile time.	The file descriptor table.	Data allocated during runtime.	Data input from the user during runtime.	The executable machine instructions.	Pseudo random numbers.	Temporary data during functions calls.
Stack							✔
Data	✔						
Heap			✔				
Text					✔		

Note: Depending on your screen size and resolution you may need to scroll sideways to see all 7 columns (options).

Marking: You get 0.5 point for each correct answer for a maximal 2 points.

Totalpoäng: 2

5

In a system using multitasking:

- Tasks may get preempted. ✔
- Tasks can only do synchronous I/O.
- Tasks uses busy waiting when waiting for I/O.
- If a task enters an infinite loop, no other tasks will be able to execute.

Totalpoäng: 1

6 The below diagram shows how a process may transition between the ready queue, the cpu and the I/O wait queue. In the diagram three events that may cause such transition are labeled A, B and C.

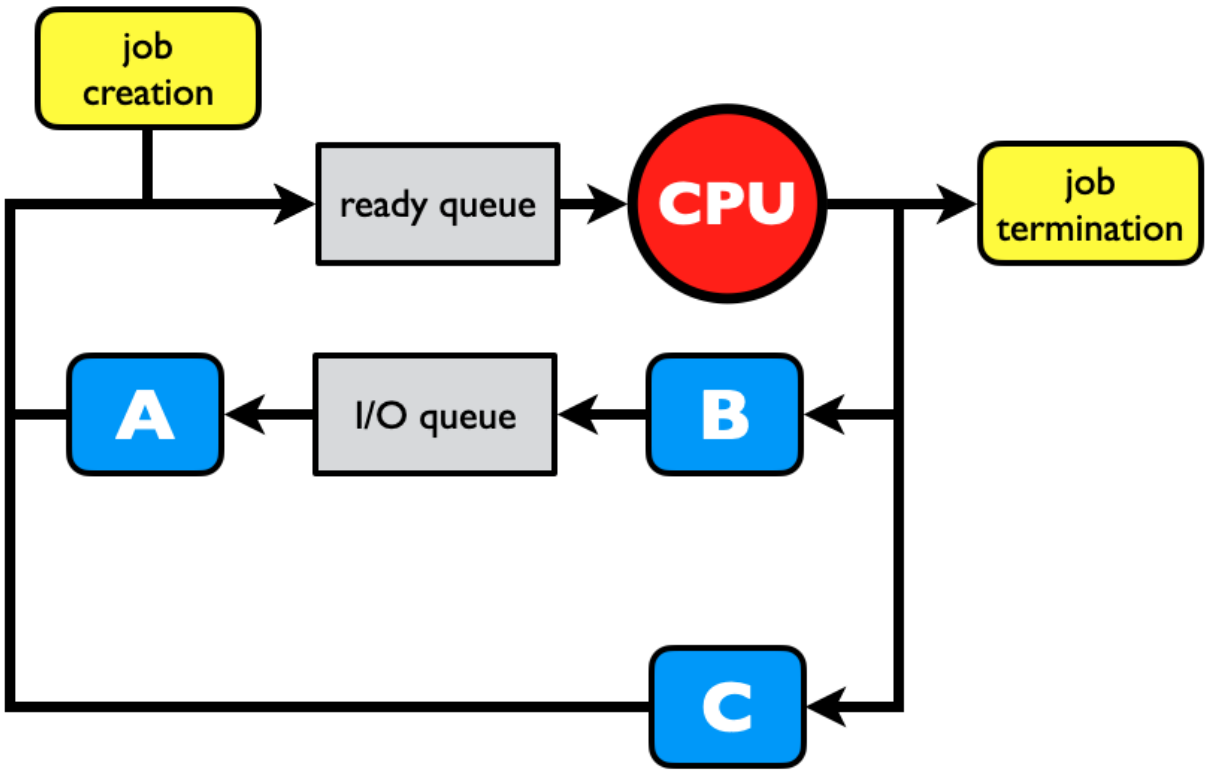

Select the correct description for the events labeled A, B and C.

	I/O Event	I/O request	Time slice expire	Dispatch	Exit	Swap out	Swap in	Context switch
A	✔							
B		✔						
C			✔					

Note: Depending on your screen size and resolution you may need to scroll sideways to see all 8 columns (options).

Marking: You get 0.5 point for each correct answer. If you get all three correct you get 2 points.

Totalpoäng: 2

7

What is the main motivation behind usage of a sliding window at the receiving side of a reliable connection?

- To inform the sender about the receiver's capacity
- To detect varying delays in the network
- To compensate for reordering of datagrams in the network ✔
- To support pipelined transmissions with selective repeat

Totalpoäng: 1

8 The Internet protocol stack

The picture below illustrates the four layers in the Internet architecture protocol stack. In the left column, specify the name of each layer. In the right column, specify what is sent at each layer from in the case of an application that uses **TCP**. Answer by dragging the right term to each box.

Hjälp

Uppermost layer	Application ✔	sends:	Message ✔
	Transport ✔	sends:	Segment ✔
	Network ✔	sends:	Packet ✔
Lowermost layer	Link ✔	sends:	Frame ✔

Socket	Transport	Transaction	Frame	Client
Session	Segment	Presentation	Control	Packet
Application	Transmission	Request	Network	Routing
Link	Physical	Message		

Totalpoäng: 2

9

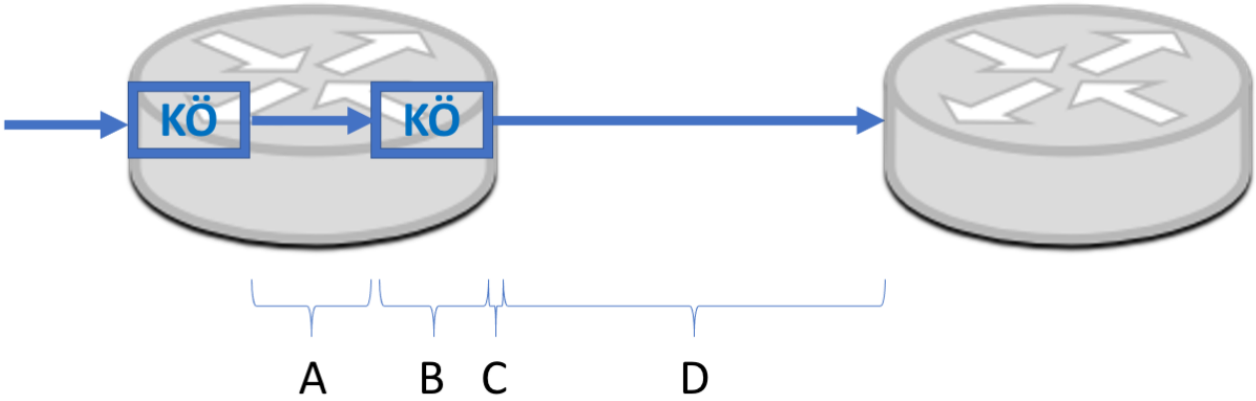

The picture above illustrates the different delay components from when the left router picks a packet from its incoming queue until the packet has been delivered to the incoming queue at the next router along the path towards the destination.

Complete the description of the different delay components by dragging the correct boxes to their correct positions in the text below.

Hjälp

transmission delay	line speed	CPU speed
queue length	cable length	processing delay
queueing speed	multiplexing delay	checksumming delay
queueing delay	speed delay	propagation delay
queuing delay	application-level protocol	segmentation delay
application delay	Netmask length	current queue length

Part A represents the processing delay ✔ which is limited by the CPU speed ✔. Part B is the queuing delay ✔ which is affected by several factors, e.g. the queue length ✔. Part C is the transmission delay ✔ that depends on the line speed ✔ while the last part, D, is the propagation delay ✔ that is affected by the cable length ✔.

Totalpoäng: 2

Module 2

10 Processes can transition between the states New, Ready, Running, Waiting and Terminated. In the below diagram, 14 suggested transitions (labeled A, B, C, ..., N) between these states are shown.

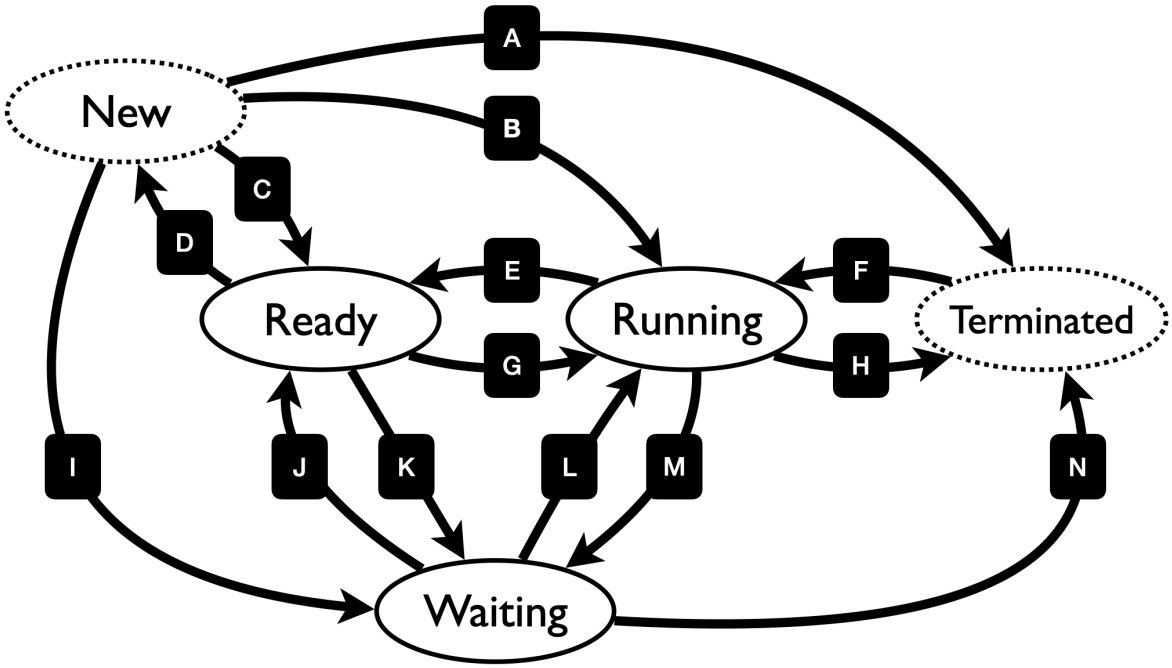

Are all the state transitions shown in the above diagram valid (possible)?

Välj alternativ (Yes, No).

For the three events in the below table, select what state transition is related to this event.

Event	Transition
Reading from an empty pipe with at least one open write descriptor.	Välj alternativ (A, B, C, D, E, F, G, H, I, J, K, L, M, N)
Receiving a signal after calling the pause system call.	Välj alternativ (A, B, C, D, E, F, G, H, I, J, K, L, M, N)
A successful creation of a child after a fork.	Välj alternativ (A, B, C, D, E, F, G, H, I, J, K, L, M, N)

Grading: You get 0.5 points for each correct answer.

Totalpoäng: 2

11

```c
int main() {
  if (fork() > 0)
    exit(EXIT_SUCCESS);
  else
    pause();
}
```

Provided fork does not fail, executing the the above C program results in:

- A zombie process.
- An orphan process. ✔
- Two child processes.
- Two zombie processes.

Totalpoäng: 1

12

By default, after a successful call to exec:

- The file descriptor table is unchanged. ✔
- All file descriptors are closed.
- STDIN is redirected to the parents STDOUT.
- All but the STDIN, STDOUT and STDERR file descriptors are closed.

Totalpoäng: 1

13 When reading from and writing to pipes, these four cases are important.

Attempt	Conditions	Result
Read	Empty pipe, writer attached	A
Write	Full pipe, reader attached	B
Read	Empty pipe, no writer attached	C
Write	No reader	D

What are the resulting actions A, B, C and D?

	Writes zero bytes	Causes a SIGPIPE	Closes all read descriptors connected to the pipe	Blocks the writer	Terminates all attached readers	Blocks the reader	Returns end of file	Blocks both the reader and the writer
C							✔	
D		✔						
A						✔		
B				✔				

Note: Depending on your screen size and resolution you may need to scroll sideways to see all 8 columns (options).

Marking: You get 0.5 points for each correct answer for a maximum of 2 points.

Totalpoäng: 2

14 Which of the following statements about signals is true?

- All signals are synchronous.
- All signals are asynchronous.
- By default, all signals are handled in user space.
- Signals can be both synchronous and asynchronous. ✔

Totalpoäng: 1

15

What is an example of a TCP flow control mechanism?

- Reducing the congestion window when observing an increase in measured RTTs
- Reducing the congestion window when the receiver indicates a near-full buffer ✔
- Reducing the congestion window significantly in the case of a timeout
- Reducing the congestion window by 50% in the case of three duplicate acknowledgments

Totalpoäng: 1

16 Drag the right statements into the text below.

Hjälp

- Lost segments will not be retransmitted
- TCP will go into slow start mode
- The connection will be closed
- The sender will wait too long before retransmitting a lost segment
- TCP will do a fast retransmit
- The receiver will fill up its receiver window
- Cumulative acknowledgments will affect the RTT

In TCP, the RTT is constantly measured with every acknowledged segment. The RTT measurements are then used to adjust the timeout timer. A too low timeout timer value will cause inefficient operation because [TCP will go into slow start mode ✔] . However, a too high timeout timer value will also cause inefficient operation because [The sender will wait too long before retransmitting a lost segme ✔] . Therefore it is necessary to find a good value of the timeout timer to avoid inefficient operation. och för det tredje fältet .

Totalpoäng: 1

17 What is true about the differences between TCP and UDP?
Välj ett alternativ:

- TCP is packet-oriented, UDP is datagram-oriented
- TCP uses a checksum for integrity check, UDP has no checksum
- TCP establishes a connection before transmission, UDP does not ✔
- TCP is secure, UDP is insecure

Totalpoäng: 1

Module 3

18 Which of the following statements is true?

- All interactive processes are I/O bound.
- CPU bound processes are characterized by many long CPU bursts.
- A high percentage of I/O bound processes increases the CPU utilization.
- Most operating systems penalize CPU bound processes in order to implicitly favouring interactive processes. ✔

Totalpoäng: 1

19 Pair (drag-and-drop) the below scheduling algorithms with the correct associated characteristic.

Hjälp

- Solves the problem with external fragmentation.
- Gives a good average response time.
- Statically assigns static priorities to processes.
- Suffers from the convoy effect
- I/O bound processes get a lower priority dynamically
- CPU bound processes will get a lower priority dynamically.
- Maximises the CPU utilization
- Minimizised the CPU utilization.

Algorithm	Charateristic
Multilevel feedback queue scheduling	CPU bound processes will get a lower priority dynamical ✔
FCFS	Suffers from the convoy effect ✔
RR	Gives a good average response time. ✔
Multiprogramming	Maximises the CPU utilization ✔

Grading: You get 0.5 points for each correct pairing for a maximum total of 2 points.

Totalpoäng: 2

20 In a CPU scheduling simulation processes arrives to the ready queue according to the following table.

PID	Arrival	CPU burst
A	0	6
B	2	7
C	3	5
D	5	2

The simulation results in the following Gantt chart.

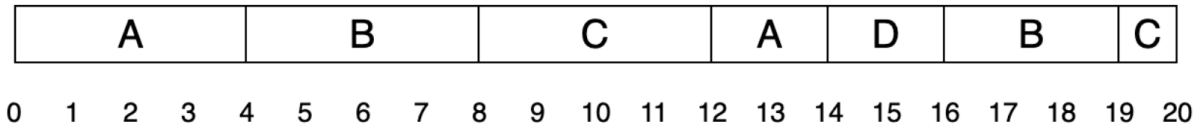

From the above Gantt chart, calculate the average waiting time and the average response time.

Tip: Remember that 1/2 = 0.5, 1/4 = 0.25, 3/4 = 0.75.

Average response time: (4.0) .

Average waiting time: (9.75)

Marking: Each correct answer will result in 1 points for a maximal total of 2 points.

Totalpoäng: 2

21 In a CPU scheduling simulation the processes A, B and C arrives to the ready queue according to the following table.

Pid	Arrival time	Burst
A	0	2
B	2	5
C	3	3

Below you find four Gantt charts for four different schedules of the above processes.

1

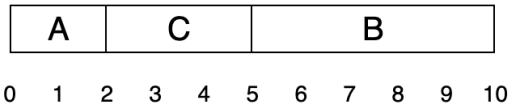

2

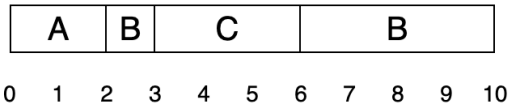

3

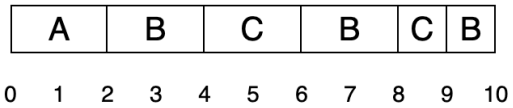

4

Which of the above Gantt charts show the PSJF schedule?

- Gantt chart 1
- Gantt chart 2 ✔
- Gantt chart 3
- Gantt chart 4

Totalpoäng: 1

22 In a CPU scheduling simulation the processes A, B, C and D arrives to the ready queue according to the following table.

Pid	Arrival time	Burst
A	0	1
B	1	3
C	3	5
D	4	1

Below you find four Gantt charts for four different schedules of the above processes.

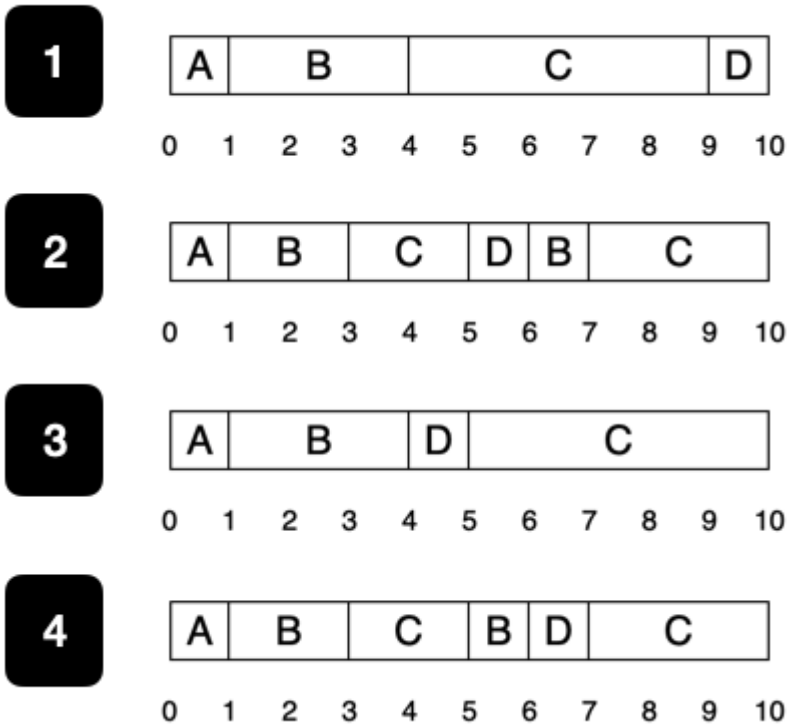

Which of the above Gantt charts show the RR, q = 2 schedule?

- Gantt chart 1
- Gantt chart 2
- Gantt chart 3
- Gantt chart 4 ✔

Totalpoäng: 1

23 Routing (2p)

En student sitter och kämpar med routinglaborationen och har nu kommit så långt att hen bestämt sig för en del IP-addresser som skall användas enligt följande figur:

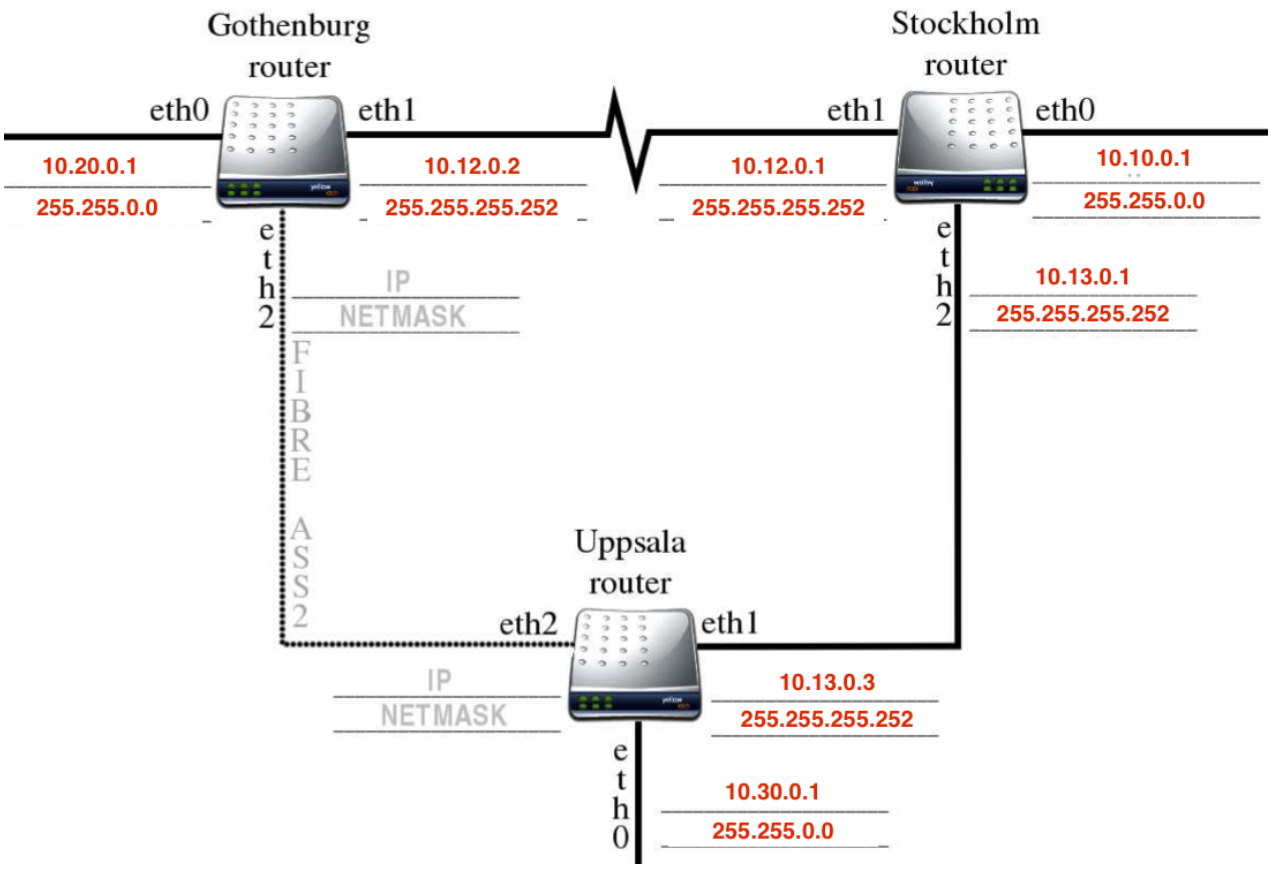

Studenten har börjat skapa en routingtabell (som inte nödvändigtvis är komplett eller helt korrekt) enligt nedan. Dra de rätta värdena enligt studentens plan i ovanstående figur till de tomma luckorna i routingtabellen.

Hjälp

eth0	eth1	255.255.255.252
10.20.0.0	255.255.255.255	10.12.0.1
10.30.0.0	10.13.0.3	10.12.0.2
255.255.255.0	10.13.0.1	eth2

eth0 ✔

10.20.0.0 ✔

10.13.0.3 ✔

Routing table at Sto

255.255.255.252 ✔

Totalpoäng: 2

24 In the figure of the network in the previous problem, which interface on what router has an IP address and netmask combination that will not work when trying to send data between the different networks?

Välj ett alternativ:

- eth0 on the Stockholm router
- eth1 on the Stockholm router
- eth1 on the Gothenburg router
- eth1 on the Uppsala router ✔

Totalpoäng: 1

Module 4

25

To be able to execute multiple threads concurrently:

- A CPU with as many cores as concurrent threads is needed.
- A CPU with at least two cores is needed.
- It suffices with a single core CPU. ✔
- A CPU with as many cores as concurrent threads plus one core for the operating system itself is needed.

Totalpoäng: 1

26 In the below table, four concepts are labeled A, B, C and D.

Label	Concept
A	A limit must exist on the number of times that other tasks are allowed to enter their critical sections after a task has made a request to enter its critical section and before that request is granted.
B	If a task is executing in a critical section, then no other tasks can be executing in the same critical section.
C	Part of a program that should not be concurrently executed by more than one of the program's concurrent processes or threads at a time.
D	If no task is executing in its critical section and there exist some task that wish to enter their critical section, then the selection of the task that will enter the critical section next cannot be postponed indefinitely.

Pair each label with the correct name for the concept.

	Critical section	Race condition	Mutual exclusion	Data race	Progress	Bounded waiting	Starvation	Peterso solutio
B			✔					
C	✔							
A						✔		
D					✔			

Note: Depending on your screen size and resolution you may need to scroll sideways to see all 8 columns (options).

Marking: You get 0.5 point for each correct answer for a total maximum of 2 points.

27

Select the four necessary conditions for deadlock

- [ ] Mutual exclusion ✔
- [ ] Hold and wait ✔
- [ ] Progress
- [ ] Circular exclusion
- [ ] Circular wait ✔
- [ ] Fairness
- [ ] Bounded wait
- [ ] Mutual preemption
- [ ] No preemption ✔
- [ ] Critical section
- [ ] Exclusive wait
- [ ] Starvation

Marking: You get 0.5 points for each correct answer.

Totalpoäng: 2

28 This is an example of one type of Resource Allocation Graph (RAG).

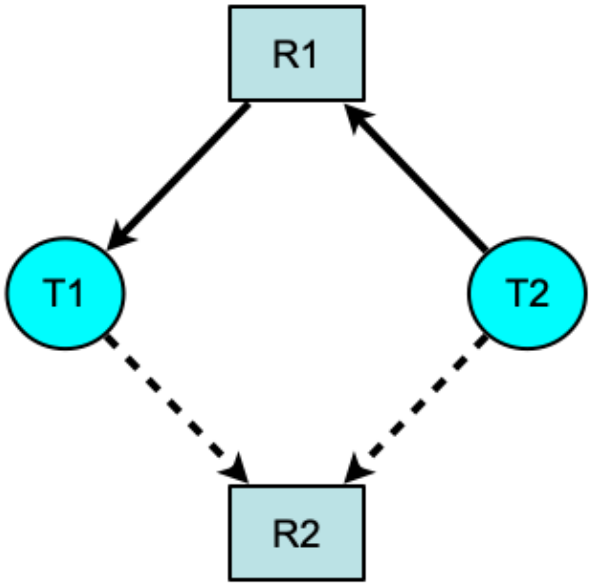

For what can this type of resource allocation graph be used?

- Deadlock avoidance, multiple instances of each resource
- Deadlock avoidance, single instance of each resource ✔
- Deadlock prevention, multiple instances of each resource
- Deadlock prevention, single instance of each resource

Marking: You get 1 point for the correct answer.

In this type of resource allocation graph, there are different kind of edges (arrows).

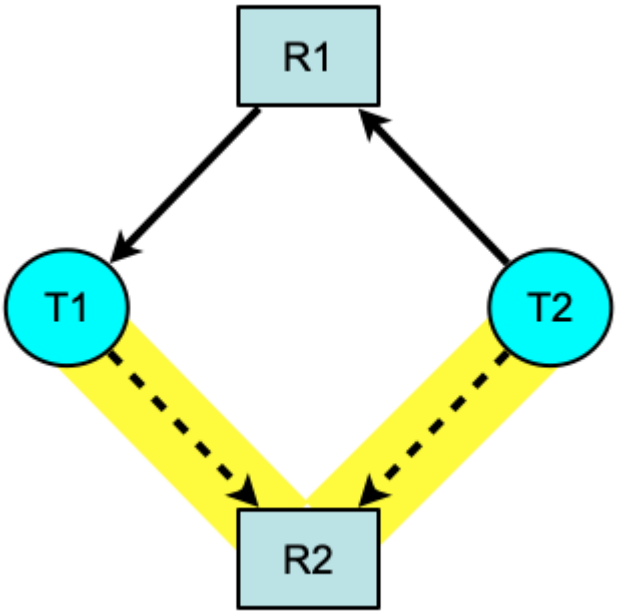

What is the name of the dotted type of edges (marked with yellow)?

- Deadlock
- Allocation
- Request
- Claim ✔

Marking: You get 1 point for the correct answer.

Totalpoäng: 2

29 Transaction properties

The ACID rule is used to remember four desirable properties of transactions. But what does the letters stand for?

Choose the right choice for each of the letter below.

Välj alternativ (Abstraction, Availability, Authentication, Atomicity, Adaptiveness, Addressability)

Välj alternativ **(Circular, Consistency, Correctness, Computable, Concurrency, Checkable)**

Välj alternativ **(Intermittent, Interruptable, Identifiable, Interchangable, In-order, Isolation)**

Välj alternativ **(Disk-storage, Deconstructable, Deterministic, Declarable, Definable, Durability)**

Totalpoäng: 1

30 Assume that you are turning on a computer that has been turned off for a week. The computer has no cached mappings from FQDN to IP or from IP to MAC addresses stored.

The first thing that happens when the computer has booted is that it executes a batch script that fetches a web page using HTTP from the server **server.uu.se** .

Fill in the blanks in the text below so that it correctly describes the series of actions.

Hjälp

ICMP	broadcast
network configuration parameters	default gateway
IPv4 address	ARP
DHCP	HTTPS
Netmask	DNS request
NAT box	MAC address
TCP	DNS server
UDP	HTTP

First, the computer needs to learn its network configuration paramete ✔ . This is done by sending a broadcast ✔ message to get its configuration from a DHCP ✔ server. Next, it needs to learn the IP address of **server.uu.se** so it sends a DNS request ✔ to the DNS server ✔ specified in the configuration. As the destination for the request is not on the same network, the packet must be sent to the default gateway ✔ for further delivery. To do this, the computer must resolve its MAC address ✔ using ARP. Once it has that information, the request is sent and the computer learns the IP address of **server.uu.se** in a response message. It can now initiate a TCP ✔ connection to **server.uu.se**, send a web request using HTTP and receive the requested data.

Totalpoäng: 2

Module 5

A schematic view of paging is shown below.

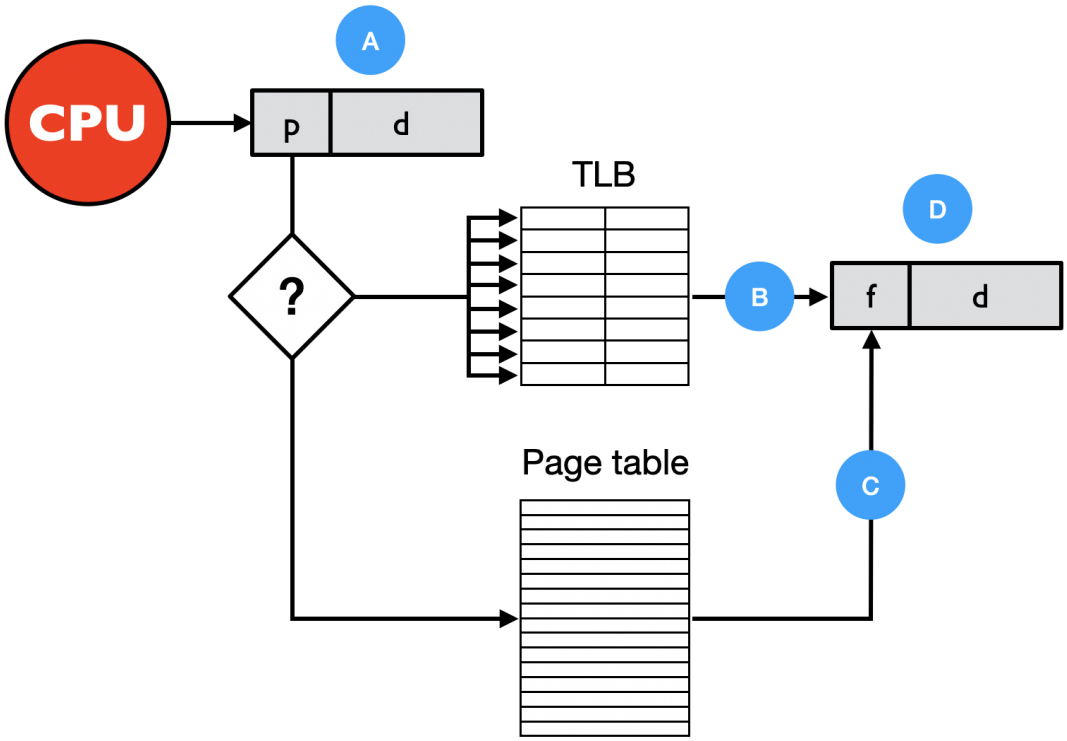

31 In the left diagram, a schematic view of paging is shown.

Select the correct descriptions for the labels A, B, C and D.

	Interrupt	Exception	TLB hit	TLB miss	Virtual memory	Logical address	MMU	Physical address
B			✔					
D								✔
A						✔		
C				✔				

Note: Depending on your screen size and resolution you may need to scroll sideways to see all 8 columns (options).

Marking: You get 0.5 point for each correct answer for a maximal total of 2 points.

Totalpoäng: 2

Module 5

32

Introducing the separation between logical and physical memory:

- Solves the problem with external fragmentation.
- Solves the problem with internal fragmentation
- Makes it possible to move a process around in memory during runtime. ✔
- Makes accessing memory faster.

Totalpoäng: 1

33 **IEC binary prefixes:** 1 KiB = 2^{10} Byte, 1 MiB = 2^{20} Byte and 1 GiB = 2^{30} Byte.

A system with 16 bit virtual addresses uses paging to translate virtual addresses to 12 bit physical addresses. Each page is 512 Byte.

Size of the virtual adress space

Use an integer together with the largest possible IEC binary prefix to denote the size of the virtual address space.

The size of the virtual address space is [ ] (64) [Välj alternativ] (Byte, KiB, MiB, GiB)

Address translation

You discover that the virtual address 0x1C3F is translated to the physical address 0x63F.

This means, that in the page table, page number [ ] (14) is translated to frame number [ ] (3)

Marking: You get 0.5 points for each correct answer and 2.0 points if you get all three correct.

Totalpoäng: 2

34 **Which of the following statements about hard links and soft links (aka symbolic links) is true?.**

- A soft link points to the same file control block (inode) as the target
- Each process that opens a file results in a new soft link pointing to the file control block (inode).
- A hard link Is a directory entry that associates a name with a file control block (inoc ✔
- Each process that opens a file results in a new hard link pointing to the file control block (inode).

Totalpoäng: 1

35 What organisation has the ambition to "*assure the open development, evolution and use of the Internet for the benefit of all people throughout the world*" ?

Välj ett alternativ:

- The Internet Society (ISOC) ✔
- The Internet Research Task Force (IRTF)
- The Internet Engineering Task Force (IETF)
- The Internet Governance forum (IGF)

Totalpoäng: 1

36 The end-to-end principle in computer networks was deduced from the end-to-end argument in system design, which is a classic guideline in the design of distributed systems and services. Which of the following is an example of following the end-to-end principle in TCP/IP?

Select one alternative:

- Best-effort delivery of datagrams based on destination address only ✔
- Using the IP TTL field to implement traceroute
- The domain name system (DNS)
- Feedback from routers about status of forwarding queues

Totalpoäng: 1

Module 5

Memory management, files and file systems

The below figure shows a number of file system data structures.

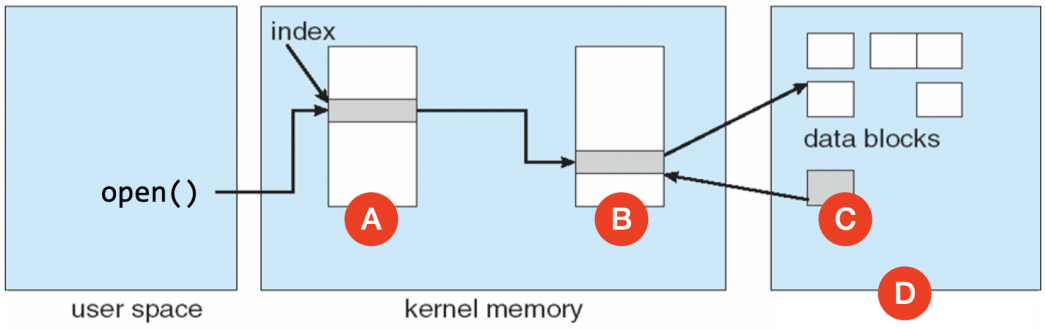

37 The figure to the left shows a number of file system data structures.

What are the names for the data structures labeled A, B and C?

	File control block	Page table	Directory structure	Process control block	Two-level index	FAT	System-wide open file table	Per-process open file table
A								✔
C	✔							
B							✔	

Note: Depending on your screen size and resolution you may need to scroll sideways to see all 8 columns (options).

Marking: You get 0.5 points for each correct answer .

Totalpoäng: 1.5

38 The figure to the left shows a number of file system data structures.

In the figure we also see that the open( ) call is made from user space and that the data structures A and B are located in kernel memory (kernel space).

Where are the data blocks and data structure C located?

	Kernel space	Tertiary storage	User space	Secondary storage	Primary storage
D	○	○	○	○ ✔	○

Marking: You get 0.5 points for the correct answer.

Totalpoäng: 0.5

End of part A

This is the end of part A of the exam.

Part B

...in which you demonstrate yourself worthy to get a higher grade by:

- **First having passed part A**
- **Scoring at least 10 points (out of 20) for grade "4"**
- **Scoring at least 15 points (out of 20) for grade "5"**

All questions in part B relate to the same scenario, as presented below. Make sure to read through the scenario carefully before moving on to the actual questions.

Du får gärna svara på svenska om det känns enklare

VR game design

You have purchased a set of virtual reality (VR) glasses and decide to take on the challenge to implement a simple multiplayer VR game.

The VR glasses are equipped with wireless communication (WiFi and Bluetooth) and require no external sensors or cables to work. They contain a small computer so there is no need to be connected to a PC, gaming console or any external device to use them. In practice, they could be used in an larger indoor area.

In your game, up to 20 players can play together in the same VR environment. The position of each player at any time is known to all other players so that they can "see" each other in the game. The game should be possible to be played without the need to access to any external server.

The gameplay is as follows: 100 balls are hidden in a computer-generated VR environment and the game is about collecting as many balls as possible during a round of 60 seconds. Each ball can only be picked up once by one player and no balls can be picked up before the round begins or after it ends.

Every ball collected is worth one point. After each round, the scores are presented to all players that participated in the round.

39 Communication (4p)

Your ambition is that the game should work without the need of extra equipment other than one pair of VR glasses per player. I.e, no wireless router or extra computer. The communication capabilities of the VR glasses is limited to standard WiFi and Bluetooth.

Can this be done? Or will you need some extra hardware? Motivate your answer so that it becomes clear how different devices should set up their communication, or why it can't be done.

Teckenf...

Ord: 0

Totalpoäng: 4

40 Synchronization and Coordination (4p)

Assuming that the communication issue from the previous problem has been solved, the players can now communicate wirelessly without a need to connect to a common server.

Knowing that *synchronization* and *coordination* are important issues in a distributed system that have real-time time constraints, you think about what problems related to these issues that you will have to adress in your system design.

For each of the concepts of synchronization and coordination, state whether this is something you will have to address or not, and why (or why not). For full points, it is important to motivate your answer for each concept with *why* you do or do not have to address it.

Teckenf...

Ord: 0

Totalpoäng: 4

41 A shared context (4p)

All players share the same VR environment, including the positions of all players and the positions and status of all balls (so they can be visualised to a player that is within line-of-sight).

Two players are approaching the same ball and try to pick it up at the same time. Somehow, you must find a fair solution to which player actually gets the ball when this happens. Also, how is the information about the ball handled so that all players share the same view of what happened and who got the ball afterwards?

Briefly outline how you deal with the situation described above, and how information about the updated shared context is distributed between the players.

Teckenf...

Ord: 0

Totalpoäng: 4

42 Communication services (4p)

Assuming that all the issues presented in the previous three problems have been addressed, it is now time to decide how to organise the communication between the players, and what communication service to use. You base your communication on TCP/IP, meaning that you can choose between TCP and/or UDP.

Do you choose UDP, TCP or maybe a combination of them? Motivate your answer with a clear reasoning of why you consider it to be the best choice.

Teckenf...

Ord: 0

Totalpoäng: 4

43 Bootstrapping (4p)

Assuming everything from the previous problems have been resolved, you now want to finish up your design by considering the bootstrapping process, i.e., how the game should start up.

You have a number of players running the same application on their VR glasses. No device is configured to be more important than another; you are using a peer-to-peer design principle where all are equal before the game application is executed.

When the players start the game, someone will be the first one, some will not be first and some may even start the game although the maximum number of players (20) has already been reached.

Describe what happens when a player starts the game in terms of creating a new game round, connecting to one that was already created or being informed that there is no room for more players. If some players get key roles, specify how those are assigned.

Teckenf...

Ord: 0

Totalpoäng: 4